Clarke®

PUMP



SUBMERSIBLE WATER PUMP

MODEL NO: CSD4B

PART NO: 7239251

OPERATION & MAINTENANCE INSTRUCTIONS

UK CA | CE

ORIGINAL INSTRUCTIONS

DL 0726

INTRODUCTION

Thank you for purchasing this CLARKE Submersible Water Pump.

This pump is designed for pumping clean water or water containing small solids in suspension. However, the inlet port will restrict this. It is not designed for pumping slurry, sludge, mud or heavily polluted water, or any water containing chemicals or other acidic contaminants including salt water.

The CSD4B is a multi stage pump with stainless steel casing and built in automatic pressure control switch for clean water applications. The four-stage plastic impellors can achieve a performance stated in the specification.

The pump has some automatic functions as follows. When any outlet valve installed in the discharge pipe is closed the pump will enter a state of holding pressure and standby. The pump will not run although there is pressure in the pipeline. When the outlet valve is opened, the pump will re-start.

If there is insufficient water the pump will stop running in dry operation mode. The pump will only run again when power and water are restored.

If a significant leak occurs in the pipeline, causing the pump to operate at random, the pump will enter protection mode and will stop until water and power are restored.

INVENTORY

- Water pump
- Plastic hose adaptor
- 15 m rope
- Dust cap
- Instruction manual

GUARANTEE

This product is guaranteed against faulty manufacture for a period of 12 months from the date of purchase. Please keep your receipt which will be required as proof of purchase.

This guarantee is invalid if the product is found to have been abused or tampered with in any way, or not used for the purpose for which it was intended.

Faulty goods should be returned to their place of purchase, no product can be returned to us without prior permission.

This guarantee does not effect your statutory rights.

PRODUCT SPECIFICATIONS

SPECIFICATIONS	CSD4B
Outlet thread size	1¼" G
Outlet adaptor size	1" /1¼" /1½"
Operating voltage & frequency	230V ~ 50Hz
Motor output	1000 W
Measured input amperage	4.87 A
Ingress protection rating	IPX8
Motor insulation class	F
Working pressure	4.5 bar
Maximum head	45 M
Maximum flow rate	6,000 L/hr
Maximum particle size	1 mm
Maximum depth	12 M
Operating temperature	0-35 deg C
Weight	11.2 kg
Cable length	15 M
Dimensions not including the elbow	150 x 150 x 535 mm
Lowest pump suction level	50 mm
Lowest pump starting level	60 mm

SAFETY PRECAUTIONS

1. This pump is designed to pump WATER ONLY. **NEVER** use for pumping flammable liquids or chemicals.
2. An approved Residual Current Device (RCD) which has a tripping current of less than 30mA must be used when pumping from ponds or swimming pools.
3. **NEVER** carry the pump by the mains lead.
4. **NEVER** pull the power lead to disconnect the pump from the power socket.
5. Your submersible pump may only be used for pumping water from a swimming pool when there is no person or animal in the pool.
6. **ALWAYS** disconnect the pump from the electrical supply before placing it into, or removing it from the water and before any cleaning or maintenance.
7. **ALWAYS** use the moulded handle with a rope or cable attached when lifting the pump. **NEVER** lift the pump by the mains cable or the float switch cable.
8. **DO NOT** allow children to use or play with the pump, cables or connections, or be involved with any cleaning or user maintenance.
9. Disconnect the pump from the power supply when not in use.
10. **ALWAYS** have the pump repaired by a qualified person.
11. **ALWAYS** keep the mains cable away from heat, oil and sharp edges.
12. **ALWAYS** check the plug, power cable and float switch cable for damage before use. **DO NOT** use if damaged. Refer to qualified service personnel for repair.
13. If you have to use an extension lead with this product, it must be designed for outdoor use and incorporate a cable suitable for use with Class I appliances.
14. The pump may be used by persons with reduced physical, sensory or mental capabilities, or lack of experience or knowledge if they have been given supervision or instruction concerning the use of the product in a safe way and if they understand the hazards involved.

ENVIRONMENTAL RECYCLING POLICY



Through purchase of this product, the customer is taking on the obligation to deal with the WEEE in accordance with the WEEE regulations in relation to the treatment, recycling & recovery and environmentally sound disposal of the WEEE. In effect, this means that this product must not be disposed of with general household waste but according to the laws governing Waste Electrical and Electronic Equipment (WEEE) at a recognised disposal facility.

If disposing of this product or any damaged components, do not dispose of with general waste. This product contains valuable raw materials. Metal products should be taken to your local civic amenity site for recycling of metal products.

ELECTRICAL CONNECTIONS

WARNING: READ THESE ELECTRICAL SAFETY INSTRUCTIONS THOROUGHLY BEFORE CONNECTING THE PRODUCT TO THE MAINS SUPPLY.

Before switching the product on, make sure that the voltage of your electricity supply is the same as that indicated on the rating plate. This product is designed to operate on 230VAC 50Hz. Connecting it to any other power source may cause damage.

This product may be fitted with a non-rewireable plug. If it is necessary to change the fuse in the plug, the fuse cover must be refitted. If the fuse cover becomes lost or damaged, the plug must not be used until a suitable replacement is obtained.

If the plug has to be changed because it is not suitable for your socket, or due to damage, it should be cut off and a replacement fitted, following the wiring instructions shown below. The old plug must be disposed of safely, as insertion into a mains socket could cause an electrical hazard.

If the colours of the wires in the power cable of this product do not correspond with the markings on the terminals of your plug, proceed as follows.

- The **Blue** wire must be connected to the terminal marked **N** or coloured **Black.**
- The **Brown** wire must be connected to the terminal marked **L** or coloured **Red.**
- The **Yellow and Green** wire must be connected to the terminal marked **E** or ⏚ or coloured **Green.**

Plug must be BS1363/A approved.

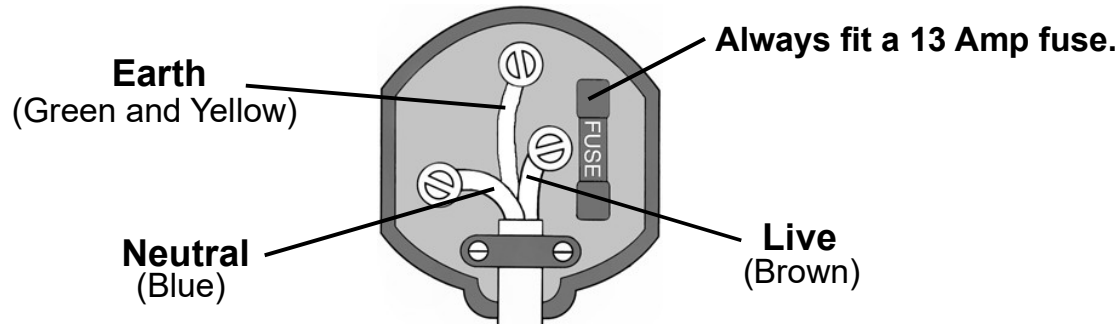

Ensure that the outer sheath of the cable is firmly held by the clamp

We strongly recommend that this machine is connected to the mains supply via a Residual Current Device (RCD). If in any doubt, consult a qualified electrician. DO NOT attempt any repairs yourself.

PREPARATION

WARNING: DISCONNECT THE PUMP FROM THE POWER SUPPLY BEFORE CONNECTING THE HOSE ADAPTOR.

WARNING: THE WATER SEAL CONTAINS LUBRICANT WHICH IS NON-TOXIC BUT WHICH MAY ALTER THE CHARACTERISTICS OF THE WATER IN THE CASE OF PURE WATER, IF THE PUMP WERE TO DEVELOP ANY LEAKS

1. Remove all packaging and make sure that the pump has no visible damage. Dispose of all packaging appropriately.
   - The stepped hose adaptor supplied is designed to be used for either screw type hose connection or push fit.
2. Remove the dust cap and screw the adaptor to the threaded connection on the pump. Connect a suitable hose (not supplied) to the adaptor.
   - Suitable hoses are available from your local CLARKE dealer.
3. When push fitting the hose to the adaptor use a jubilee clip to secure it.
4. Connect the mains plug to the mains supply via a high sensitivity residual current device (RCD) which has a tripping current of less then 30mA.
5. Switch the mains power supply on.

For maximum efficiency, we recommend that you connect a 32mm diameter hose to the hose adapter.

POSITIONING THE PUMP

WARNING: CHECK THE PUMP FOR DAMAGE BEFORE USE. DO NOT USE THE PUMP IF IT IS DAMAGED IN ANY WAY.

WARNING: THE WATER BEING PUMPED WILL BE POLLUTED IF THIS PUMP BECOMES DAMAGED AND LUBRICANT WITHIN THE PUMP ESCAPES.

1. The pump is completely submersible and should be placed in a vertical position on a solid flat surface, placing the pump on a couple of house bricks if required. Place the pump on a flat surface in the area that you want to drain.
2. Ensure the pump is positioned with adequate space - recommended minimum base area of 20 x 20 cm and the maximum depth of any installation - 12 metres. The pump is supplied with 15 metres of power cable.
3. **ALWAYS** raise and lower the pump using the lifting handle and a rope attached to it if required. A rope of 15m length is provided for this purpose. **NEVER** lift or lower the pump using the power cable.

4. The filter base inlet must be fully submerged before the pump is switched on and the pump is standing vertical.
5. **DO NOT** position the pump on sand or ground which is likely to shift.
    - If there is sediment in the operating area, the pump should be placed on house bricks or similar.
    - Take all precautions as described on page 4 before switching on.

WARNING: NEVER CARRY THE PUMP USING THE POWER CABLE. DAMAGE TO ELECTRICAL CABLES CAN BE HAZARDOUS. ALWAYS USE THE HANDLE WHEN MOVING THE PUMP.

When used in a fixed location it is recommended that rigid pipes with check valves be used in fixed positions. This will prevent the water from flowing back when the pump is shut down.

USEFUL ACCESSORIES FROM THE CLARKE CATALOGUE

Hoses	Hose Clips
	
• Available in 100 metre coils or per meter.	• Zinc plated for corrosion resistance.

Hoses, clips and other items are available from your CLARKE dealer.

OPERATING THE PUMP

1. **DO NOT** use the pump if there is any damage to the supply cable.
2. **NEVER** run the pump dry.
3. Switch the power supply on to set the pump running.
4. **DO NOT** run the pump with the body exposed for more than a couple of minutes.
5. **DO NOT** allow the pump to run dry.
6. Isolate the pump from the power supply when finished.
7. **DO NOT** use the pump if the water is liable to freeze as this can cause damage to the pump. Remove the pump from the water and store it in a frost free location.

OVERLOAD PROTECTION

These pumps are fitted with automatic thermal overload protection.

If the pump overheats due to an obstruction in the pump or pumping warm water for example, it will shut off automatically.

Switch the pump OFF at the mains supply. Check for blockages and allow the motor to cool (at least 5 minutes) by which time the cut-out will have reset.

Once the pump has cooled the pump will automatically restart.

AFTER USE

If the pump has been used with substances that tend to form a deposit or with water containing chlorine, rinse it after use with a powerful jet of water in order to avoid the formation of deposits or encrustations which would reduce the pump's performance.

If the temperature is expected to be lower than 0°C, ensure there is no water remaining which could freeze and damage the pump.

MAINTENANCE

WARNING: BEFORE CHECKING THE CONDITION OF THE PUMP, ENSURE IT IS ISOLATED FROM THE POWER SUPPLY.

This pump should require no maintenance other than regular cleaning. If the pump starts to show signs of wear or damage, contact your CLARKE dealer for advice.

Check the pump regularly to ensure the water inlet is clear of leaves or other debris.

Further cleaning may be required by back-flushing the pump with water pressure from a hose.

DO NOT attempt to repair the pump yourself as you may damage the waterproof seal and invalidate your guarantee. Repairs must be carried out by your CLARKE dealer or contact the CLARKE Service Department on 020 8988 7400.

If the troubleshooting on page 10 does not solve your problem, please contact the CLARKE service department.

TROUBLESHOOTING

PROBLEM	CAUSE AND SOLUTION
PUMP WILL NOT START	1. Check to ensure power is switched on. 2. Check fuse (consult an electrician if in doubt). 3. If extension lead is fitted, check connections (consult an electrician if in doubt). 4. Internal thermal cut-out has not re-set. Leave for 5 minutes and try again. 5. The impeller may be jammed. Disconnect from the power supply, remove the bottom plate and remove any objects that may be obstructing the impeller. Replace the bottom plate and try again. 6. If the pump still fails to start consult your CLARKE dealer.
PUMP WILL START BUT NOT PUMP	1. Check to ensure water entry is not blocked. 2. Discharge pathway clogged or obstructed. 3. The head may be too great, i.e. you are trying to lift the water too great a distance for the pump to cope with. (See specification and performance chart page 13). 4. Air bubble in the pump, produced during the plunge. Plunge the pump again, at an angle and shake it whilst lowering to remove any air trapped in the system. 5. Impeller may be damaged - Consult your CLARKE dealer.
FLOW RATE TOO LITTLE	1. Insufficient water supply not reaching impellor height. 2. Outlet hose crushed. Replace/repair pipeline. 3. Water heavily contaminated with suspended material. Clear blockage and clean inlet.
PUMP STOPS RUNNING	1. Thermal overload has operated. If this condition persists, investigate the cause. Are you attempting to pump liquid which is too heavy for the pump (mud, slurry etc.)? 2. Pump has run dry. 3. A foreign object has jammed the impeller.

COMPONENT PARTS

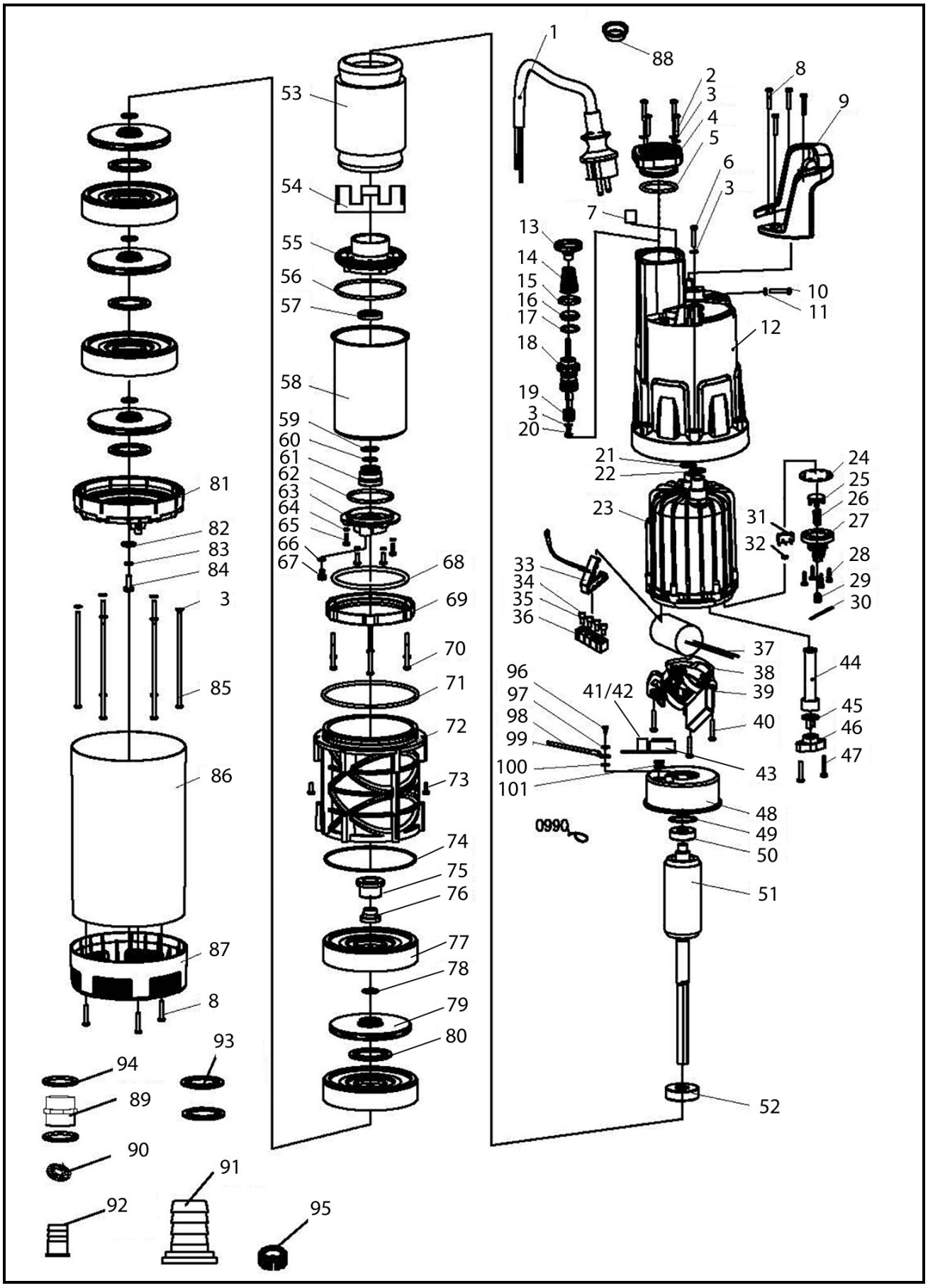

COMPONENT PARTS

1	Power cable
2	X-head s/t screw
3	Gasket
4	Cover
5	O-ring
6	S/t screw
7	Filter
8	X-head s/t screw
9	Handle
10	Custom s/t screw
11	O-ring
12	Rear pump housing
13	Valve body
14	Spring
15	O-ring
16	Sealing gasket
17	O-ring
18	Valve spool
19	Magnet
20	X-head s/t screw
21	O-ring
22	O-ring
23	Rear housing cover
24	Sealing gasket
25	Block
26	Spring
27	Waterproof ring
28	Custom s/t screw
29	Screw
30	Signal line
31	Micro-switch
32	RTV silica gel
33	Rack earth welding
34	Pressing cap

35	Pressing cap
36	Rubber clip
37	Capacitor
38	Cover plate
39	PCB c/w screw
40	Custom s/t screw
41	Printed circuit board
42	RTV silica glue
43	Circuit board box
44	Cable sheath
45	Cable retainer
46	Cable locking block
47	X-head s/t screw
48	Metal back cover
49	Corrugated gasket
50	Bearing
51	Rotor
52	Bearing
53	Stator
54	Front lining ring
55	Lower bearing seat
56	O-ring
57	Skeleton seal ring
58	Front cover
59	Shaft retaining ring
60	Adjusting gasket
61	Mechanical seal
62	O-ring
63	End cap
64	Spring washer
65	X-head s/t screw
66	O-ring
67	Screw
68	O-ring

69	Clamping ring
70	X-head s/t screw
71	O-ring
72	Main housing
73	X-head s/t screw
74	O-ring
75	Mechanical seal
76	Bushing
77	Diffuser plate
78	O-ring
79	Impeller
80	Plastic pads
81	Internal pump base
82	Gasket
83	Spring washer
84	Screw
85	Custom s/t screw
86	Stainless steel case
87	Pump base
88	Dust cover
89	Contraction joint
90	Lifting rope
91	Output connector
92	Output connector
93	Sealing gasket
94	O-ring
95	Connecting nut
96	X-head s/t screw
97	Serrated washer
98	Conducting wire
99	Connector
100	Spring washer
101	Wire bushing

PUMP PERFORMANCE

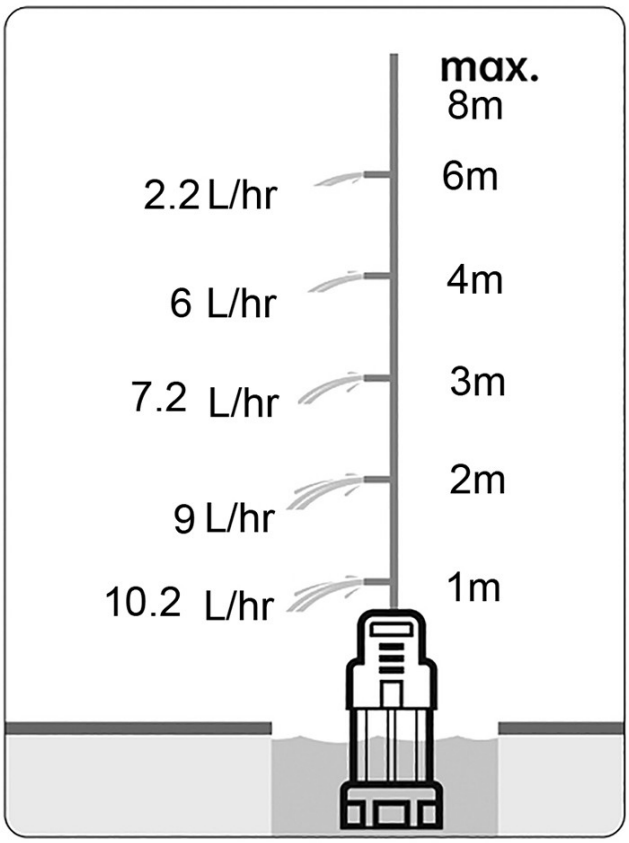

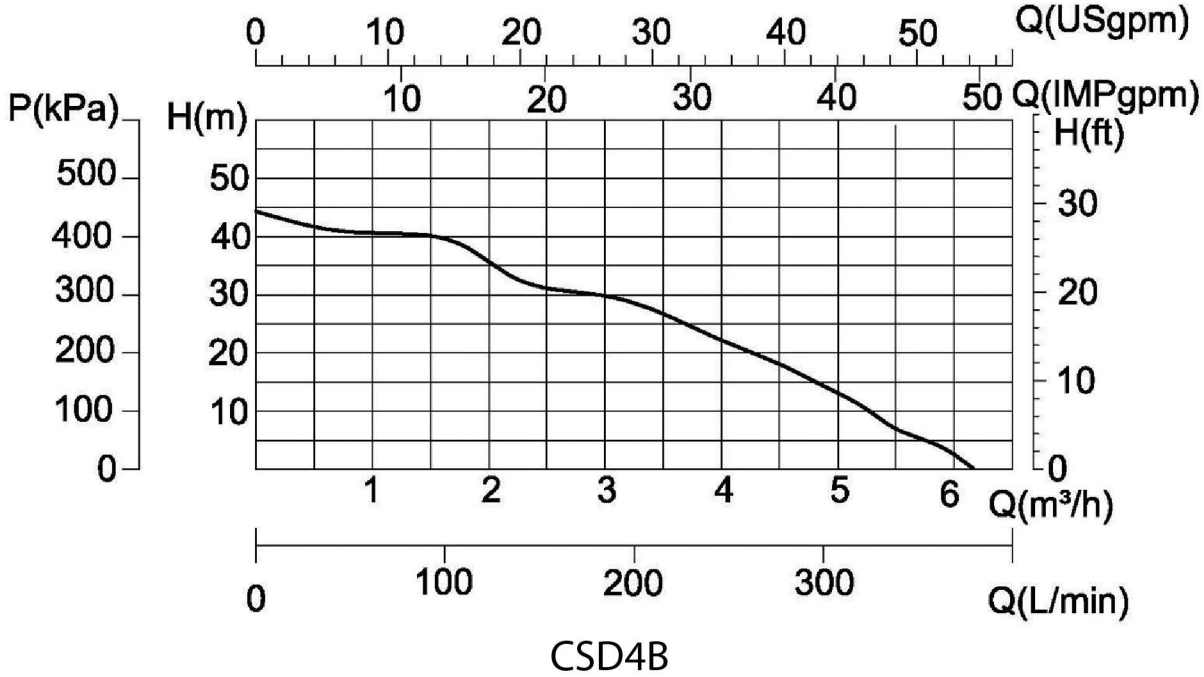

CSD4B

DECLARATION OF CONFORMITY - UK

UK CA

Clarke® INTERNATIONAL

Hemnall Street, Epping, Essex, CM16 4LG

DECLARATION OF CONFORMITY

This is an important document and should be retained.

We hereby declare that this product(s) complies with the following legislation:

2014/30/EU	*Electromagnetic Compatibility Directive*
2006/42/EC	*Machinery Directive*
2011/65/EU	*Restriction of Hazardous Substances (RoHS) Directive*

The following standards have been applied to the product(s):

EN 60335-1:2012+A11+A13+A1+A14+A2+A15, EN IEC 60335-2-41:2021+A11, IEC 62321-3-1:2013, IEC 62321-4:2013+A1:2017, EN IEC 61000-3-2:2019+A1, IEC 62321-7-1:2015, IEC 62321-7-2:2017, EN IEC 55014-1:2021, IEC 62321-1:2013, IEC 62321-2:2021, IEC 62321-5:2013, IEC 62321-6:2015, EN 61000-3-3:2013+A1+A2, EN IEC 55014-2:2021, EN ISO 12100:2010, IEC 62321-12:2023, IEC 62321-8:2017, EN 62233:2008

The technical documentation required to demonstrate that the product(s) meet(s) the requirement(s) of the aforementioned legislation has been compiled and is available for inspection by the relevant enforcement authorities.

The UKCA mark was first applied in: 2026

Product Description:	Submersible Pump
Model Number(s):	CSD4B
Serial/Batch Number:	Refer to product/packaging label
Date of Issue:	25/03/2026

Signed:

J.A Clarke

Director

CSD4B UKCA Clarke DOC 032526

Page 1 of 1

DECLARATION OF CONFORMITY - CE

CE

Clarke® INTERNATIONAL

Fitzwilliam Hall, Fitzwilliam Place, Dublin 2

DECLARATION OF CONFORMITY

This is an important document and should be retained.

We hereby declare that this product(s) complies with the following legislation:

2014/30/EU	*Electromagnetic Compatibility Directive*
2006/42/EC	*Machinery Directive*
2011/65/EU	*Restriction of Hazardous Substances (RoHS) Directive*

The following standards have been applied to the product(s):

EN 60335-1:2012+A11+A13+A1+A14+A2+A15, EN IEC 60335-2-41:2021+A11, IEC 62321-3-1:2013, IEC 62321-4:2013+A1:2017, EN IEC 61000-3-2:2019+A1, IEC 62321-7-1:2015, IEC 62321-7-2:2017, EN IEC 55014-1:2021, IEC 62321-1:2013, IEC 62321-2:2021, IEC 62321-5:2013, IEC 62321-6:2015, EN 61000-3-3:2013+A1+A2, EN IEC 55014-2:2021, EN ISO 12100:2010, IEC 62321-12:2023, IEC 62321-8:2017, EN 62233:2008

The technical documentation required to demonstrate that the product(s) meet(s) the requirement(s) of the aforementioned legislation has been compiled and is available for inspection by the relevant enforcement authorities.

The CE mark was first applied in: 2026

Product Description:	Submersible Pump
Model Number(s):	CSD4B
Serial/Batch Number:	Refer to product/packaging label
Date of Issue:	25/03/2026

Signed:

J.A Clarke

Director

CSD4B CE Clarke DOC 032526

Page 1 of 1

A SELECTION FROM THE VAST RANGE OF

Clarke®

QUALITY PRODUCTS













AIR COMPRESSORS
From DIY to industrial, Plus air tools, spray guns and accessories.

GENERATORS
Prime duty or emergency standby for business, home and leisure.

POWER WASHERS
Hot and cold, electric and engine driven - we have what you need

WELDERS
Mig, Arc, Tig and Spot.
From DIY to auto/industrial.

METALWORKING
Drills, grinders and saws for DIY and professional use.

WOODWORKING
Saws, sanders, lathes, mortisers and dust extraction.

HYDRAULICS
Cranes, body repair kits, transmission jacks for all types of workshop use.

WATER PUMPS
Submersible, electric and engine driven for DIY, agriculture and industry.

POWER TOOLS
Angle grinders, cordless drill sets, saws and sanders.

STARTERS/CHARGERS
All sizes for car and commercial use.

PARTS & SERVICE:
0208 988 7400

Parts Enquiries
Parts@clarkeinternational.com

Servicing & Technical Enquiries
Service@clarkeinternational.com

SALES: UK 01992 565333 or Export 00 44 (0)1992 565335

Clarke® INTERNATIONAL Hemnall Street, Epping, Essex CM16 4LG
www.clarkeinternational.com